RE 8 ∅8 mm, Precious Metal Brushes, 0.5 Watt

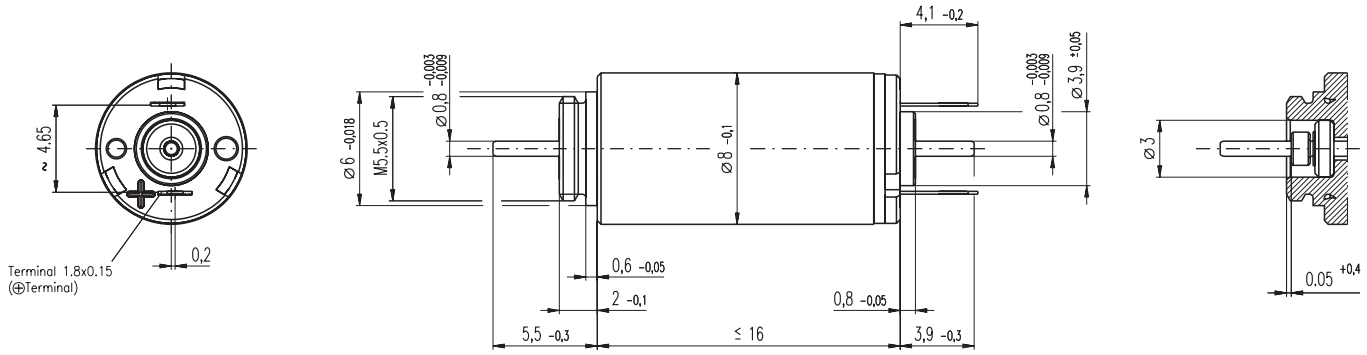

M 2.5:1

Stock program
Standard program
Special program (on request!)

			Order Number					
			261492	261508	261509	261513	261510	261512
Motor Data (provisional)								
1	Assigned power rating	W	0.5	0.5	0.5	0.5	0.5	0.5
2	Nominal voltage	Volt	2.4	4.2	6.0	7.2	9.0	12.0
3	No load speed	rpm	14500	14700	13900	14900	15000	16200
4	Stall torque	mNm	0.889	0.896	0.824	0.832	0.920	0.889
5	Speed / torque gradient	rpm / mNm	16800	17000	17500	18600	16800	18900
6	No load current	mA	20	11	7	7	5	5
7	Starting current	mA	581	340	207	187	166	130
8	Terminal resistance	Ohm	4.13	12.3	29.0	38.5	54.3	92.2
9	Max. permissible speed	rpm	22000	22000	22000	22000	22000	22000
10	Max. continuous current	mA	411	237	155	134	113	86.8
11	Max. continuous torque	mNm	0.628	0.625	0.616	0.598	0.628	0.593
12	Max. power output at nominal voltage	mW	331	339	293	319	355	370
13	Max. efficiency	%	68	68	67	67	68	67
14	Torque constant	mNm / A	1.53	2.63	3.98	4.45	5.55	6.83
15	Speed constant	rpm / V	6240	3630	2400	2150	1720	1400
16	Mechanical time constant	ms	6	6	6	6	6	6
17	Rotor inertia	gcm^2	0.037	0.036	0.035	0.033	0.036	0.033
18	Terminal inductance	mH	0.04	0.13	0.29	0.36	0.56	0.85
19	Thermal resistance housing-ambient	K / W	48	48	48	48	48	48
20	Thermal resistance rotor-housing	K / W	22	22	22	22	22	22
21	Thermal time constant winding	s	3	3	3	3	3	2

Specifications

- Axial play 0.05 - 0.15 mm
- Max. **sleeve bearing** loads
  axial (dynamic) 0.15 N
  radial (4 mm from flange) 0.6 N
  Force for press fits (static) 10 N
- Radial play **sleeve bearing** 0.012 mm
- Ambient temperature range -20 ... +65°C
- Max. rotor temperature +85°C
- Number of commutator segments 5
- Weight of motor 4.1 g
- 2 pole permanent magnet
- Ceramic shaft
- Values listed in the table are nominal.
  For applicable tolerances see page 43.
  For additional details please use the maxon selection program on the enclosed CD-Rom.

Operating Range

Comments Details on page 49

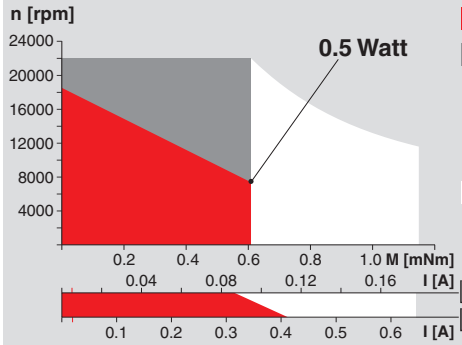

Recommended operating range

Continuous operation
In observation of above listed thermal resistances (lines 19 and 20) the maximum permissible rotor temperature will be reached during continuous operation at 25°C ambient.
= Thermal limit.

Short term operation
The motor may be briefly overloaded (recurring).

261512 Motor with high resistance winding
~~261492~~ Motor with low resistance winding

maxon Modular System

Overview on page 17 - 21

Planetary Gearhead
∅8 mm
0.005 - 0.06 Nm
Details page 190

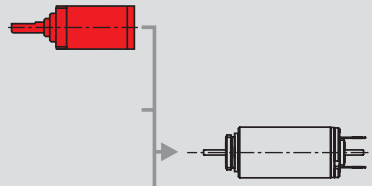

Recommended Electronics:
LSC 30/2 page 251
Notes