# FOUR-POINT CONTACT BALL SLEWING RINGS

**-with internal gear [ I ]**

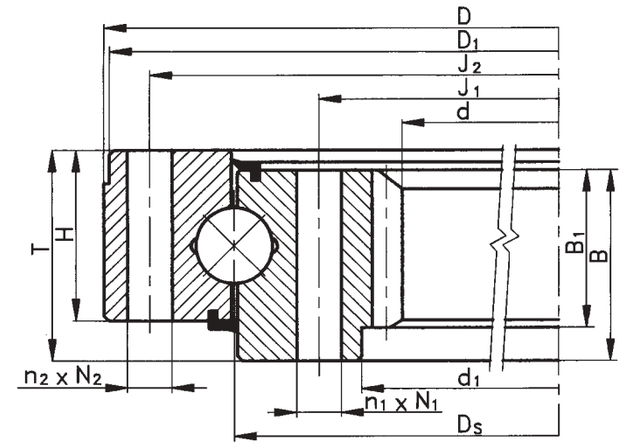


| Number of the Loading Curve | Boundary Dimensions d | D | T | Static Ax.Basic Load Rating $C_{0a}$ | Designation | Weight G | Abutment Dimensions $J_1$ | $J_2$ | $N_1$ | $N_2$ | $n_1$ | $n_2$ | Other Specifications $d_1$ | $D_1$ | H | B | $B_1$ | m(DP) | z | x | Permisible circumferencial force $F_{TDov}$ | $F_{TmaxDov}$ | Note No. |
|---|---|---|---|---|---|---|---|---|---|---|---|---|---|---|---|---|---|---|---|---|---|---|---|
| | [mm] | | | [kN] | | [kg] | [mm] | | | | | | [mm] | | | | | | | | [kN] | | |
| 69 | **256.95** | 418 | 50 | 708 | **9I-1B20-0342-0351** | 25 | 295 | 390 | 5/8-11 UNC | 5/8-11 UNC | 24 | 18 | - | - | 44 | 44 | 44 | (5/7) | 52 | - | 27 | 54 | 1 |
| 70 | **323.8** | 520.5 | 54 | 1140 | **9I-1B25-0422-0283** | 46 | 365.1 | 479.4 | 5/8-11 UNC | 5/8-11 UNC | 20 | 20 | - | - | 52.3 | 52.3 | 52.3 | (5/7) | 65 | - | 29 | 58 | 1; 2 |
| 71 | **380** | 545 | 55 | 988 | **9I-1B20-0465-0136** | 38 | 420 | 510 | M12x1.25 | 13 | 16 | 16 | 400 | - | 45 | 45 | 40 | 4 | 96 | -0.375 | 14 | 28 | 3 |
| 72 | **427.99** | 654.05 | 69.85 | 1533 | **9I-1B25-0560-0467** | 84 | 495.3 | 622.3 | 5/8-11 UNC | 17.5 | 24 | 18 | - | - | 60.45 | 60.45 | 60.45 | (4) | 69 | - | 34 | 69 | 3; 4 |
| 73 | **427.99** | 663.45 | 80.26 | 1995 | **9I-1B32-0560-0449** | 101.5 | 495.3 | 628.65 | 3/4-10 UNC | 20.1 | 24 | 18 | - | 660.4 | 69.09 | 76.2 | 76.2 | (4) | 69 | - | 44 | 88 | 3; 4 |
| 74 | **428** | 670 | 69.85 | 1533 | **9I-1B25-0559-0496** | 88.5 | 495.3 | 628.65 | 3/4-10 UNC | 20.6 | 30 | 24 | - | - | 60.45 | 60.45 | 60.45 | (4) | 69 | - | 34 | 69 | 3; 4 |
| 75 | **546** | 716 | 69 | 1382 | **9I-1B20-0644-0135** | 55 | 605 | 690 | M12 | 13.5 | 40 | 40 | - | - | 46 | 60 | 60 | 6 | 93 | - | 31 | 63 | 3 |
| 76 | **560** | 825 | 90 | 3095 | **9I-1B36-0715-0317** | 137.5 | 645 | 785 | M20 | 22 | 44 | 43 | - | - | 78 | 78 | 78 | 10 | 57 | -0.5 | 90 | 180 | 5 |
| 77 | **619.76** | 910.06 | 87.88 | 3515 | **9I-1B40-0780-0454** | 182 | 700 | 859.99 | 3/4-10 UNC | 20.6 | 30 | 30 | - | 907.16 | 79 | 79 | 79 | (3.5) | 87 | - | 50 | 101 | 4 |
| 78 | **633** | 870 | 72 | 2572 | **9I-1B29-0761-0411** | 121 | 697 | 825 | 3/4-10 UNC | 3/4-10 UNC | 36 | 30 | - | - | 63 | 63 | 63 | (4) | 101 | - | 34 | 69 | 2; 4 |
| 79 | **633** | 870 | 92 | 3011 | **9I-1B35-0761-0414** | 160 | 697 | 825 | 3/4-16 UNF | 3/4-16 UNF | 36 | 30 | - | - | 83 | 83 | 83 | (4) | 101 | - | 34 | 69 | 2; 4 |
| 80 | **648.2** | 851 | 70 | 2123 | **9I-1B25-0763-0186** | 95 | 705 | 820 | M16 | M16 | 24 | 24 | 677 | 850 | 55 | 60 | 55 | 6 | 109 | -0.5 | 38 | 76 | |
| 81 | **650.24** | 848.36 | 55.88 | 1588 | **9I-1B20-0741-0400** | 82 | 701.8 | 812.8 | 1/2-13 UNC | 17.5 | 28 | 15 | - | - | 45.7 | 45.7 | 45.7 | (4) | 104 | - | 23 | 47 | 3; 4 |
| 82 | **656** | 868 | 77 | 2009 | **9I-1B22-0782-0444** | 104 | 730 | 834 | M16 | 18 | 24 | 24 | 694 | - | 55 | 68 | 64 | 8 | 82 | -1 | 49 | 98 | |
| 83 | **670** | 857 | 88.9 | 2122 | **9I-1B25-0762-0391** | 120 | 727.075 | 822.325 | 3/4-10 UNC | 3/4-10 UNC | 24 | 20 | 696.97 | - | 73.15 | 86.1 | 51.05 | (4) | 107 | - | 28 | 56 | 2; 4 |
| 84 | **736** | 950 | 70 | 2403 | **9I-1B25-0860-0157** | 98.5 | 805 | 920 | M16 | M16 | 30 | 30 | 775 | - | 55 | 60 | 55 | 8 | 94 | - | 46 | 92 | |
| 85 | **786.54** | 990.6 | 114.3 | 3267 | **9I-1B32-0897-0198** | 170 | 849.884 | 944.118 | 3/4-10 UNC | 3/4-10 UNC | 30 | 30 | 820.42 | - | 85.85 | 90.42 | 50.8 | (3.5) | 110 | - | 38 | 76 | 2; 4 |
| 86 | **786.7** | 990.6 | 114.3 | 3545 | **9I-1B35-0895-0415** | 168 | 849.884 | 944.118 | 3/4-10 UNC | 3/4-10 UNC | 30 | 30 | 817.4 | - | 85.85 | 90.42 | 76.2 | (3.5) | 110 | - | 47 | 95 | 2; 4 |
| 87 | **944** | 1159 | 79 | 3021 | **9I-1B25-1065-0134** | 161 | 1015 | 1124 | M16 | 17.5 | 36 | 36 | - | - | 54 | 70 | 70 | 8 | 118 | -1 | 64 | 129 | 3 |
| 88 | **945.4** | 1200 | 100 | 3781 | **9I-1B29-1103-0323** | 240 | 1040 | 1165 | M20x1.5 | 21.5 | 36 | 36 | - | - | 80 | 82 | 82 | 12 | 80 | - | 95 | 190 | 3 |
| 89 | **961** | 1177 | 90 | 3702 | **9I-1B30-1070-0372** | 181 | 1040 | 1134 | 5/8-11 UNC | 17.8 | 36 | 36 | 1011.2 | 1174 | 77 | 80.5 | 70.1 | (2.5) | 94 | - | 75 | 150 | 3; 6 |
| 90 | **957.07** | 1168.4 | 100.08 | 3970 | **9I-1B32-1087-0421** | 190 | 1039.88 | 1134.11 | 3/4-10 UNC | 3.4-10 UNC | 36 | 36 | 1005.84 | 1165.35 | 83.06 | 83.06 | 55.12 | (2.5) | 96 | - | 58 | 117 | 2; 7; 8 |
| 91 | **957.07** | 1168.4 | 119.38 | 4977 | **9I-1B40-1086-0450** | 205 | 1039.88 | 1134.11 | 3/4-10 UNC | 3/4-10 UNC | 36 | 36 | 1005.84 | 1165.35 | 93.98 | 95.25 | 55.12 | (2.5) | 96 | - | 58 | 117 | 2; 7 |
| 92 | **1007.87** | 1298.45 | 90.42 | 4277 | **9I-1B32-1167-0504** | 282 | 1092.2 | 1247.775 | 1-8 UNC | 27 | 20 | 22 | 1057.15 | - | 79.25 | 68.33 | 65.79 | (2.5) | 100 | - | 69 | 139 | 3; 9 |
| 93 | **1048.51** | 1320.8 | 128.52 | 6037 | **9I-1B45-1187-0352** | 349 | 1130.18 | 1279.52 | 7/8-9 UNC | 23.8 | 40 | 36 | 1091.44 | - | 50.8 | 119.13 | 101.6 | (2.5) | 104 | - | 107 | 214 | 3; 9 |
| 94 | **1060.7** | 1339.85 | 121.41 | 5534 | **9I-1B40-1204-0197** | 361 | 1149.35 | 1295.4 | 1-8 UNC | 27 | 30 | 30 | 1104.9 | 1336.55 | 98.55 | 104.9 | 76.2 | (2.5) | 106 | - | 67 | 134 | 3; 4 |
| 95 | **1071** | 1305 | 98 | 4408 | **9I-1B32-1200-0392** | 245 | 1156 | 1265 | M16 | 21 | 48 | 48 | 1120 | - | 82 | 90 | 88 | 10 | 106 | -1.5495 | 102 | 204 | 3 |
| 96 | **1083.6** | 1310 | 110 | 4172 | **9I-1B29-1213-0324** | 243 | 1170 | 1275 | M20x1.5 | 21.5 | 36 | 36 | - | - | 80 | 94 | 94 | 14 | 79 | - | 127 | 254 | 3 |
| 97 | **1140** | 1404 | 112 | 3667 | **9I-1B25-1296-0180** | 303 | 1232 | 1360 | M20 | 22 | 48 | 48 | - | - | 70 | 103 | 103 | 10 | 115 | -0.5 | 119 | 238 | |
| 98 | **1162** | 1460 | 120 | 5905 | **9I-1B38-1340-0325** | 402 | 1270 | 1420 | M24x2 | 25 | 36 | 35 | 1227 | - | 95 | 105 | 98 | 14 | 85 | - | 131 | 263 | 3; 10 |
| 99 | **1610** | 2000 | 150 | 12609 | **9I-1B60-1830-0267** | 885 | 1720 | 1940 | 30 | 30 | 54 | 54 | 1665 | - | 125 | 125 | 100 | 12 | 135 | -0.5 | 139 | 278 | |

Notes

1 Gear Fellow Stub Tooth System $\alpha$ = 20°
2 Non-through tapped fixing holes on both rings
3 Non-through tapped fixing holes on inner ring
4 Gear Involute Stub $\alpha$ = 20°
5 Fixing holes on outer ring are divided on the circumference with spacing a' 360°/52
6 Centering diameter ∅ 1011.2 is on both sides of the ring (on the front face into the depth of 1. on the opposite face into the depth 9.4)
7 Gear Involute Stub-Full Fillet Radius $\alpha$ = 20°
8 Opposite face of the inner ring is fitted on ∅ 1010.92 into the depth 7.11
9 Gear Involute Modification Stub-Full Fillet Radius $\alpha$ = 20°
10 Fixing holes on outer ring are divided on the circumference with spacing a' 360°/36